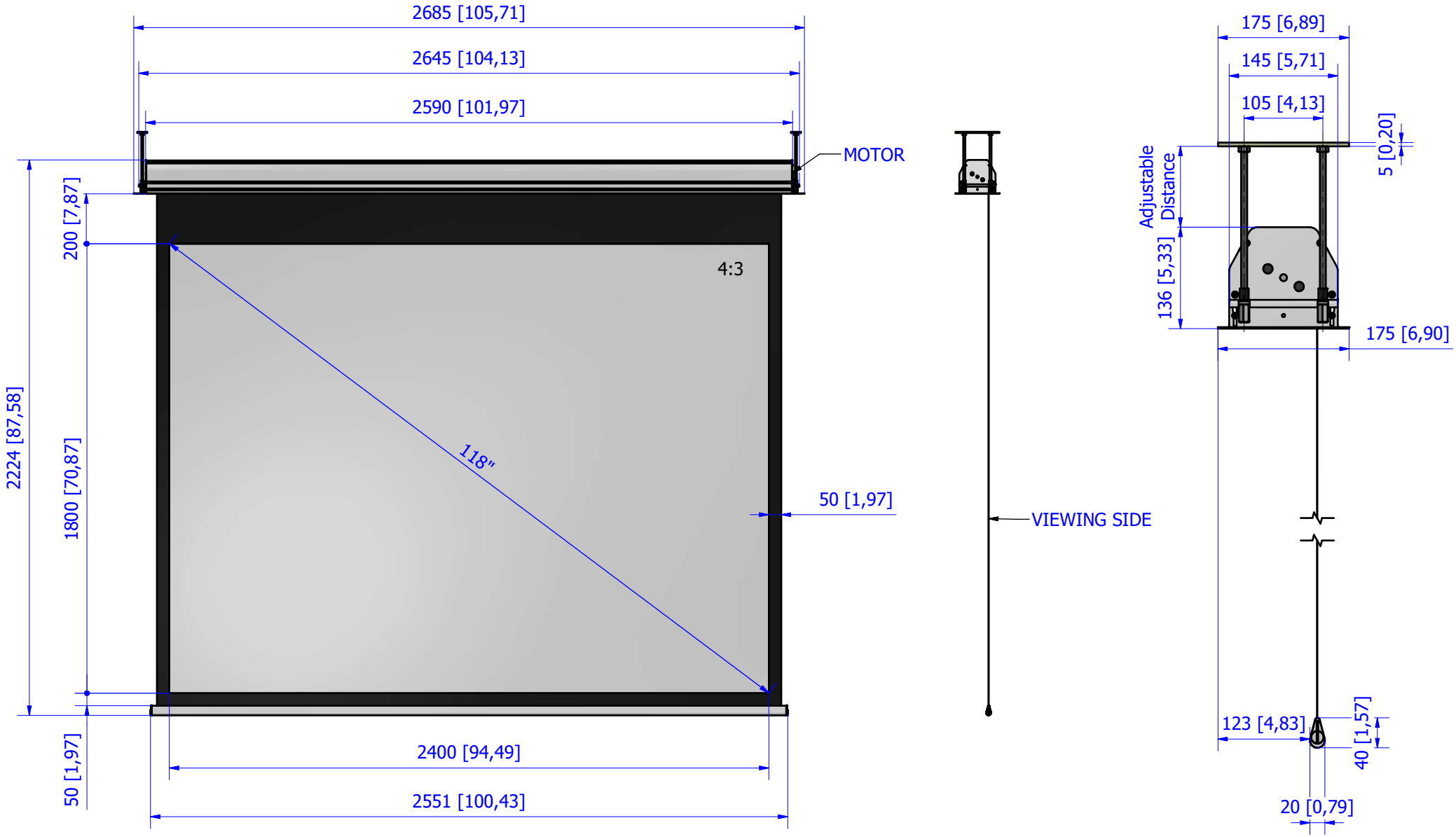

Cut out for false ceiling: 2665 x 155 mm

Dimensions are in mm [inch]	SCREENLINE the screen makes the difference	Description: Inceiling			Codice univoco: Standard	Product Code: IC240BXX	
According on the required fabric, a welding line may be present		Weight: 22kg	Shipping weight: 30kg	Encumbrance: 269x18x14	Drawer: F.A.	VCode: UT-0009894.iam	
Please notice that all dimensions are subject to conventional industry tollerances				Shipping dimensions: 285x23x23	Date: 18/02/2021	Sheet: A3	Scale: 1 : 15